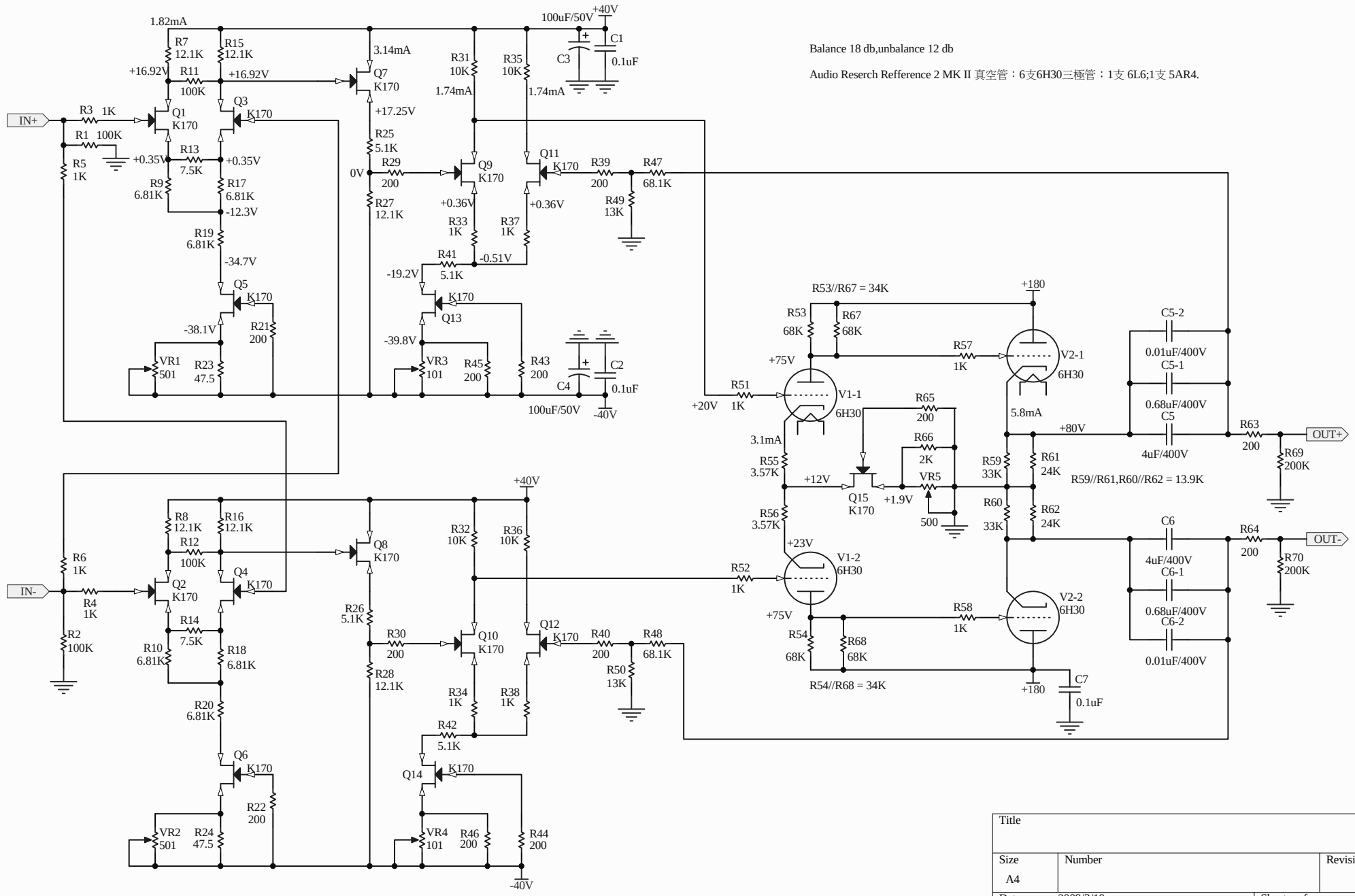

Title		
Size A4	Number	Revision
Date: 2009/3/10		Sheet of
File: C:\Users\..\REF2_PreAmp-DZ.SCHDOC		Drawn By: